Corning Optical Communications LLC.
4200 Corning Place.
Charlotte, NC. 28216, USA

Phone. 800-743-2675
Fax. 828-325-5060
International. +1-828-901-5000
www.corning.com/opcomm

Applications Engineering Note

NVIDIA 800G InfiniBand and Ethernet Connectivity Solutions Utilizing Structured Cabling

AEN 185, Revision 0

This Application Engineering Note will discuss the different available fiber optic connectivity to work with 200G, 400G and 800G transceivers, and breakout options within the same rack or row, and across the data center utilizing 400G NDR InfiniBand Quantum-2 and 400GbE Spectrum-4 Ethernet (400G IB/EN) switch capabilities.

With the introduction of 800G, NVIDIA optical transceiver modules utilize a new Twin (dual) MPO-12 transceiver interface utilizing 2x 8-fibers. Corning's EDGE8® solution is designed to support both single-mode and multimode optical interfaces based on the use of two, four, eight, and sixteen fibers at the transceiver.

The following is a partial list of NVIDIA transceivers by connector type:

Twin MPO-12 APC Interface (OSFP)		MPO-12 APC Interface (QSFP112)	
Single Mode	**Single Mode**	**Single Mode**	**Multimode**
800G-DR8 OSFP **2x 8-fiber transceiver** MMS4X00-NM MMS4X00-NS MMS4X00-NS-FLT*	**400G-DR4 OSFP** **8-fiber transceiver** **Uses 1 out of 2 ports** MMS4X00-NS400 **200G-DR4 OSFP**** **4-fiber transceiver** **Uses 1 out of 2 ports** MMS4X00-NS400	**400G-DR4 QSFP112** **8-fiber transceiver** MMS1X00-NS400 **200G-DR4 QSFP112**** **4/8-fiber transceiver** MMS1X00-NS400	**400G-SR4 QSFP112** **8-fiber transceiver** MMA1Z00-NS400 **200G-SR4 QSFP112**** **4/8-fiber transceiver** MMA1Z00-NS400
Multimode	**Multimode**		
800G-SR8 OSFP **2x 8-fiber transceiver** MMA4Z00-NS MMA4Z00-NS-FLT*	**400G-SR4 OSFP** **8-fiber transceiver** **Uses 1 out of 2 ports** MMA4Z00-NS400 **200G-SR4 OSFP**** **4-fiber transceiver** **Uses 1 out of 2 ports** MMA4Z00-NS400		
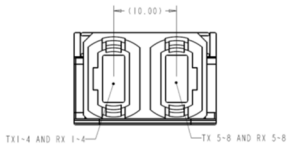	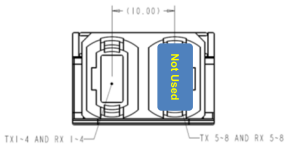	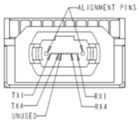	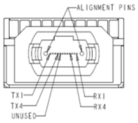

**The card I/Os are routed internally to four 800G Twin-port OSFP*

***A 400G transceiver version will be able to support 200G utilizing a splitter cable (Y-Harness), activating two of the four lanes (4 out of 8-fibers) in the 400G transceiver creating a 200G device*

****For more information on NVIDIA components and design, please review the Annex 3 with the references to NVIDIA Overview Whitepapers.*

Scenario 1 - 800G and 400G - Switch to Server

MPO-8/12 APC to MPO-8/12 APC Local

Application: Quantum-2 InfiniBand or Spectrum-4 Ethernet to a) Quantum-2 InfiniBand or Spectrum-4 Ethernet; b) ConnectX-7 and Bluefield-3; c) DGX H100/Cedar-7 links

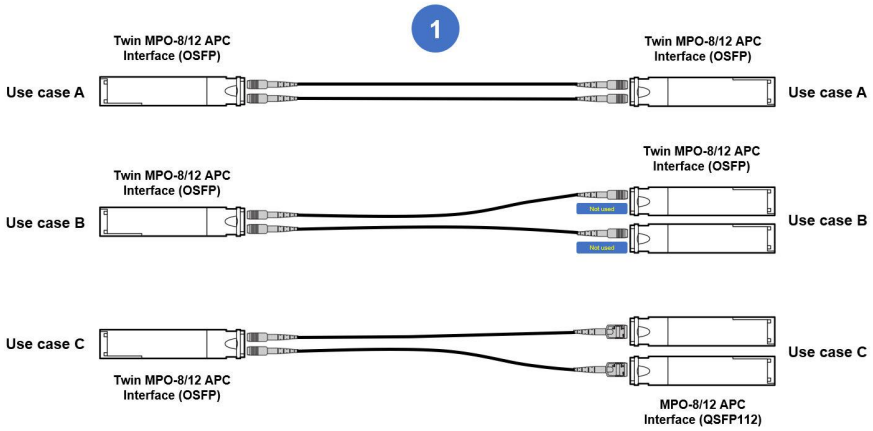

Use case	Near End Optic (Left)			Far End Optic (Right)			Reach	Fiber Type
	Speed	NVIDIA Port	Footprint - Fiber/Transceiver	Speed	NVIDIA Port	Footprint - Fiber/Transceiver		
A	800G-DR8	MMS4X00-NM	OSFP - 2x 8F	800G-DR8	MMS4X00-NM	OSFP - 2x 8F	500m	Single mode
	800G-DR8	MMS4X00-NS	OSFP - 2x 8F	800G-DR8	MMS4X00-NS	OSFP - 2x 8F	100m	Single mode
	800G-DR8	MMS4X00-NS-FLT	OSFP - 2x 8F	800G-DR8	MMS4X00-NS	OSFP - 2x 8F	100m	Single mode
B	800G-DR8	MMS4X00-NS	OSFP - 2x 8F	400G-DR4	MMS4X00-NS400	OSFP - 8F	100m	Single mode
C	800G-DR8	MMS4X00-NS	OSFP - 2x 8F	400G-DR4	MMS1X00-NS400	QSFP112 - 8F	100m	Single mode
A	800G-SR8	MMA4Z00-NS	OSFP - 2x 8F	800G-SR8	MMA4Z00-NS	OSFP - 2x 8F	50m	Multimode
	800G-SR8	MMA4Z00-NS-FLT	OSFP - 2x 8F	800G-SR8	MMA4Z00-NS	OSFP - 2x 8F	50m	Multimode
B	800G-SR8	MMA4Z00-NS	OSFP - 2x 8F	400G-SR4	MMA4Z00-NS400	OSFP - 8F	50m	Multimode
C	800G-SR8	MMA4Z00-NS	OSFP - 2x 8F	400G-SR4	MMA1Z00-NS400	QSFP112 - 8F	50m	Multimode

Item	Reference Part Number	OS2 Part Number (Americas)	OS2 Part Number (EMEA and APJ)	OM4 Part Number (Americas)	OM4 Part Number (EMEA and APJ)	Description
1	**Corning** [(a)]	JV8V808GE8-NBxxxF	JV8V808GEZ-NBxxxM	JV6V608QE8-NBxxxF	JV6V608QEZ-NBxxxM	EDGE8®, 8-F Jumper, MTP® APC (unpinned) to MTP APC (unpinned), Type-B polarity, xxxF (feet) or xxxM (meters)
	NVIDIA [(b)]	MFP7E30-Nxxx		MFP7E10-Nxxx		NVIDIA MPO-12/APC-to-MPO12/APC (8 fibers), Straight Crossover Fibers, Fiber Cable Product, Type-B polarity, xxx indicate length in meters

Notes:

a) Corning cables in Americas use Plenum cable and EMEA/APJ uses LSZH™/CPR rated cable. Lengths available from 1 to 300 meters. Lengths in meters are also available for the Americas.

b) NVIDIA cables utilize a dual rated OFNR/LSZH jacket. SMF cable lengths available in 3, 5, 7, 10, 15, 20, 30, 50, 100 and 150 meters. MMF cable lengths available in 3, 5, 7, 10, 15, 20 ,25, 30, 35, 40 and 50 meters.

c) Both Corning and NVIDIA cables support InfiniBand, Ethernet and NVLink protocols.

d) Please review Corning's polarity drawings in Annex 2.

Published: 25/Oct/2023

Scenario 2 - 800G and 400G - Switch to Switch

MPO-8/12 APC to MPO-8/12 APC Across DC with Trunk

Application: Quantum-2 InfiniBand or Spectrum-4 Ethernet to a) Quantum-2 InfiniBand or Spectrum-4 Ethernet; b) ConnectX-7 and Bluefield-3; c) DGX H100/Cedar-7 links

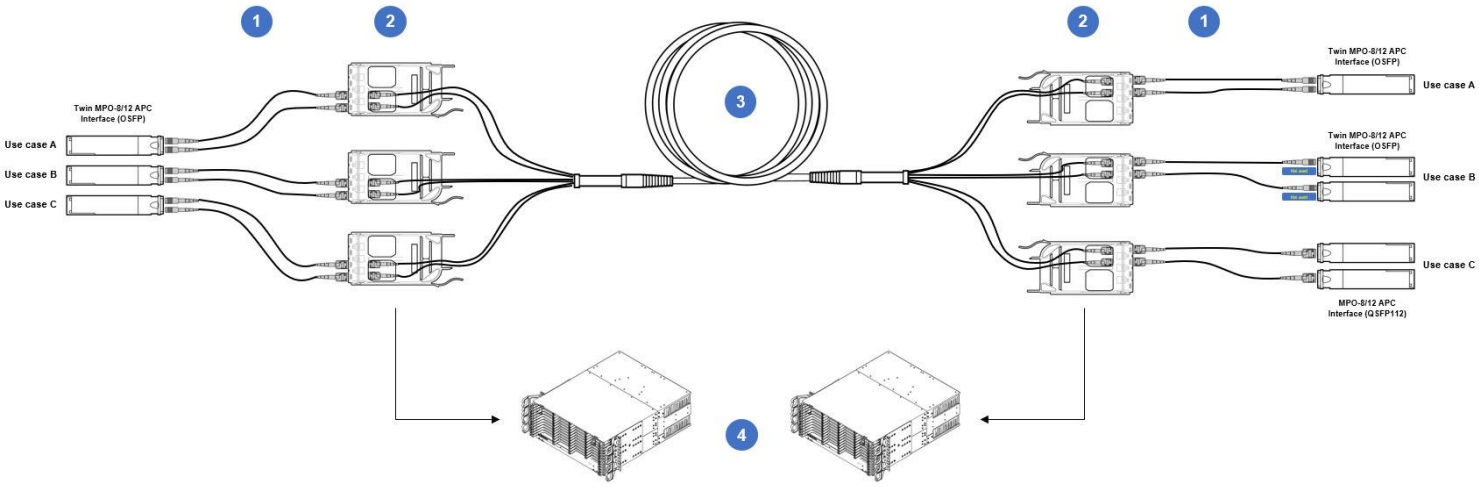

Use case	Near End Optic (Left)			Far End Optic (Right)			Reach	Fiber Type
	Speed	NVIDIA Port	Footprint - Fiber/Transceiver	Speed	NVIDIA Port	Footprint - Fiber/Transceiver		
A	800G-DR8	MMS4X00-NM	OSFP - 2x 8F	800G-DR8	MMS4X00-NM	OSFP - 2x 8F	500m	Single mode
	800G-DR8	MMS4X00-NS	OSFP - 2x 8F	800G-DR8	MMS4X00-NS	OSFP - 2x 8F	100m	Single mode
	800G-DR8	MMS4X00-NS-FLT	OSFP - 2x 8F	800G-DR8	MMS4X00-NS	OSFP - 2x 8F	100m	Single mode
B	800G-DR8	MMS4X00-NS	OSFP - 2x 8F	400G-DR4	MMS4X00-NS400	OSFP - 8F	100m	Single mode
C	800G-DR8	MMS4X00-NS	OSFP - 2x 8F	400G-DR4	MMS1X00-NS400	QSFP112 - 8F	100m	Single mode
A	800G-SR8	MMA4Z00-NS	OSFP - 2x 8F	800G-SR8	MMA4Z00-NS	OSFP - 2x 8F	50m	Multimode
	800G-SR8	MMA4Z00-NS-FLT	OSFP - 2x 8F	800G-SR8	MMA4Z00-NS	OSFP - 2x 8F	50m	Multimode
B	800G-SR8	MMA4Z00-NS	OSFP - 2x 8F	400G-SR4	MMA4Z00-NS400	OSFP - 8F	50m	Multimode
C	800G-SR8	MMA4Z00-NS	OSFP - 2x 8F	400G-SR4	MMA1Z00-NS400	QSFP112 - 8F	50m	Multimode

Item	Reference Part Number	OS2 Part Number (Americas)	OS2 Part Number (EMEA and APJ)	OM4 Part Number (Americas)	OM4 Part Number (EMEA and APJ)	Description
1	Corning [a]	JV8V808GE8-NBxxxF	JV8V808GEZ-NBxxxM	JV6V608QE8-NBxxxF	JV6V608QEZ-NBxxxM	EDGE8®, MTP® APC (non-pinned) to MTP APC (non-pinned) 8-F Jumper, TIA-568 Type-B polarity, xxxF (feet) or xxxM (meters)
2		EDGE8-CP32-V1	EDGE8-CP32-V1	EDGE8-CP32-V3	EDGE8-CP32-V3	EDGE8 32-F MTP Adapter Panel, (4-port)
3		GE7E748GPNDDU xxxF[b]	GE7E748GLZDDU xxxM[b]	GE2E248QPNDDU xxxF[b]	GE2E248QLZDDU xxxM[b]	EDGE8, MTP Trunk , 48 F, MTP APC (pinned) to MTP APC (pinned), 33-in (840-mm) legs, Type-B polarity, pulling grip on first end only, xxxF (feet) or xxxM (meters)
4		EDGE8-xxU	EDGE8-xxU	EDGE8-xxU	EDGE8-xxU	Please refer to Annex 1 to choose the best option for your application

Notes:

a) Corning cables in Americas use Plenum cable and EMEA/APJ uses LSZH™/CPR rated cable. Jumper lengths available from 1 to 300 meters. Lengths in meters are also available for the Americas.

b) Trunks are available in fiber counts of 8 to 288 fibers.

c) Corning cables support InfiniBand, Ethernet and NVLink protocols.

d) Please review Corning's polarity drawings in Annex 2.

Published: 25/Oct/2023

Scenario 3 - 800G and 200G - Switch to Server

MPO-8/12 APC to MPO-8/12 APC Local

Application: Quantum-2 InfiniBand or Spectrum-4 Ethernet to ConnectX-7 / Bluefield-3

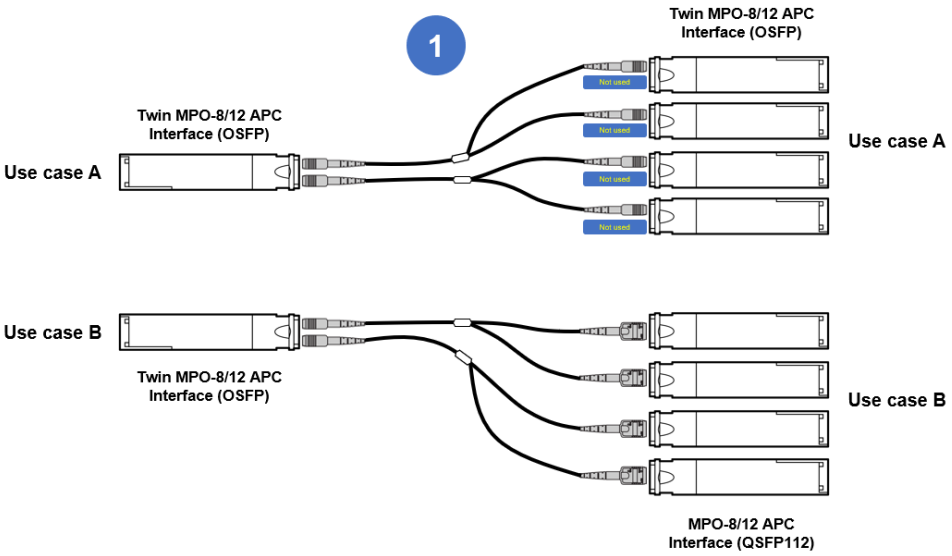

Use case	Near End Optic (Left)			Far End Optic (Right)			Reach	Fiber Type
	Speed	NVIDIA Port	Footprint - Fiber/Transceiver	Speed	NVIDIA Port	Footprint - Fiber/Transceiver		
A	800G-DR8	MMS4X00-NS	OSFP - 2x 8F	200G-DR4	MMS4X00-NS400	OSFP - 4F	100m	Single mode
B	800G-DR8	MMS4X00-NS	OSFP - 2x 8F	200G-DR4	MMS1X00-NS400	QSFP112 - 4F	100m	Single mode
A	800G-SR8	MMA4Z00-NS	OSFP - 2x 8F	200G-SR4	MMA4Z00-NS400	OSFP - 4F	50m	Multimode
B	800G-SR8	MMA4Z00-NS	OSFP - 2x 8F	200G-SR4	MMA1Z00-NS400	QSFP112 - 4F	50m	Multimode

Item	Reference Part Number	OS2 Part Number (Americas)	OS2 Part Number (EMEA and APJ)	OM4 Part Number (Americas)	OM4 Part Number (EMEA and APJ)	Description
1	**Corning** [(a)]	HV8V808GPH-LBxxxF	HV8V808GLZ-LBxxxM	HV6V608QPH-LBxxxF	HV6V608QLZ-LBxxxM	8-F Y-Harness, MTP® APC (unpinned) to two 4-F (unpinned) MTP APC, 36-in (910-mm) breakout leg length, Type-B polarity, xxxF (feet) or xxxM (meters)
	NVIDIA [(b)]	MFP7E40-Nxxx		MFP7E20-Nxxx		NVIDIA MPO-12/APC-to-MPO12/APC (8 fibers), 4-channel-to-two 2-channel splitter fiber cable, Type-B polarity, xxx indicate length in meters

Notes:

a) Corning cables in Americas use Plenum cable and EMEA/APJ uses LSZH™/CPR rated cable. Y-Harness lengths available from 1 to 60 meters. Lengths in meters are also available for the Americas.

b) NVIDIA splitter cables utilize a dual rated OFNR/LSZH jacket. SMF and MMF splitter cable lengths available in 3, 5, 7, 10, 15, 20, 30 and 50 meters.

c) Both Corning and NVIDIA cables support InfiniBand, Ethernet and NVLink protocols.

d) A 400G transceiver version will be able to support 200G utilizing a splitter cable (Y-Harness), activating two of the four lanes (4 out of 8-fibers) in the 400G transceiver creating a 200G device.

e) Please review Corning's polarity drawings in Annex 2.

Published: 25/Oct/2023

Scenario 4 - 800G and 200G - Switch to Switch

MPO-8/12 APC to MPO-8/12 APC Across DC with Trunk

Application: Quantum-2 InfiniBand or Spectrum-4 Ethernet to ConnectX-7 / Bluefield-3

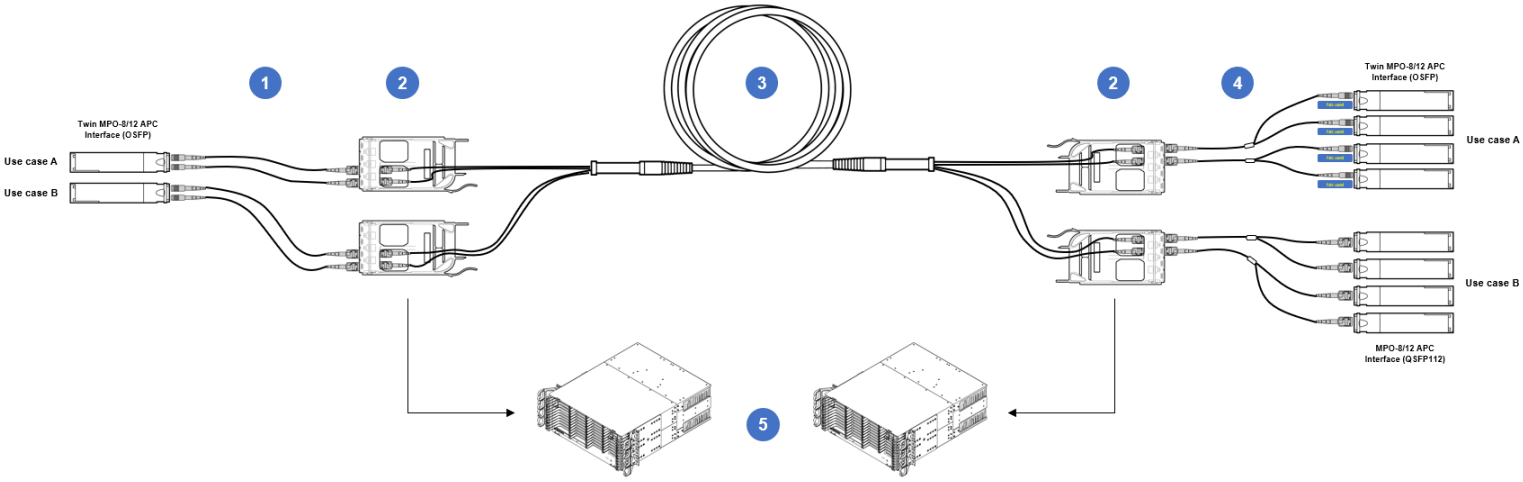

Use case	Near End Optic (Left)			Far End Optic (Right)			Reach	Fiber Type
	Speed	NVIDIA Port	Footprint - Fiber/Transceiver	Speed	NVIDIA Port	Footprint - Fiber/Transceiver		
A	800G-DR8	MMS4X00-NS	OSFP - 2x 8F	200G-DR4	MMS4X00-NS400	OSFP - 4F	100m	Single mode
B	800G-DR8	MMS4X00-NS	OSFP - 2x 8F	200G-DR4	MMS1X00-NS400	QSFP112 - 4F	100m	Single mode
A	800G-SR8	MMA4Z00-NS	OSFP - 2x 8F	200G-SR4	MMA4Z00-NS400	OSFP - 4F	50m	Multimode
B	800G-SR8	MMA4Z00-NS	OSFP - 2x 8F	200G-SR4	MMA1Z00-NS400	QSFP112 - 4F	50m	Multimode

Item	Reference Part Number	OS2 Part Number (Americas)	OS2 Part Number (EMEA and APJ)	OM4 Part Number (Americas)	OM4 Part Number (EMEA and APJ)	Description
1	Corning [a]	JV8V808GE8-NBxxxF	JV8V808GEZ-NBxxxM	JV6V608QE8-NBxxxF	JV6V608QEZ-NBxxxM	EDGE8®, MTP® APC (non-pinned) to MTP APC (non-pinned) 8-F Jumper, TIA-568 Type-B polarity, xxxF (feet) or xxxM (meters)
2		EDGE8-CP32-V1	EDGE8-CP32-V1	EDGE8-CP32-V3	EDGE8-CP32-V3	EDGE8 32-F MTP Adapter Panel, (4-port)
3		GE7E732GPNDDU xxxF[b]	GE7E732GLZDDU xxxM[b]	GE2E232QPNDDU xxxF[b]	GE2E232QLZDDU xxxM[b]	EDGE8, MTP Trunk , 32 F, MTP APC (pinned) to MTP APC (pinned), 33-in (840-mm) legs, Type-B polarity, pulling grip on first end only, xxxF (feet) or xxxM (meters)
4		HV8V808GPH-LBxxxF	HV8V808GLZ-LBxxxM	HV6V608QPH-LBxxxF	HV6V608QLZ-LBxxxM	8-F Y-Harness, MTP® APC (unpinned) to two 4-F (unpinned) MTP APC, 36-in (910-mm) breakout leg length, Type-B polarity, xxxF (feet) or xxxM (meters)
5		EDGE8-xxU	EDGE8-xxU	EDGE8-xxU	EDGE8-xxU	Please refer to Annex 1 to choose the best option for your application

Notes:

a) Corning cables in Americas use Plenum cable and EMEA/APJ uses LSZH™/CPR rated cable. Jumper lengths available from 1 to 300 meters; Y-Harness lengths available from 1 to 60 meters. Lengths in meters are also available for the Americas.

b) Trunks are available in fiber counts of 8 to 288 fibers.

c) Corning cables support InfiniBand, Ethernet and NVLink protocols.

d) A 400G transceiver version will be able to support 200G utilizing a splitter cable (Y-Harness), activating two of the four lanes (4 out of 8-fibers) in the 400G transceiver creating a 200G device.

e) Please review Corning's polarity drawings in Annex 2.

Published: 25/Oct/2023

Annex 1

EDGE8® HD housings mount in 19-inch racks or cabinets and provide industry-leading ultra-high-density connectivity when combined with EDGE8 modules, panels, harnesses, trunks, and jumpers. As each customer and project has specific needs, please add the housing that best suits your needs to the BOM:

	Part Number (Global)	Maximum Number of Modules or Panels	Maximum Fiber Density		Height
	EDGE8-01U-SP	18	LC	144 fibers	1U
			MTP®	576 fibers	
	EDGE8-02U	36	LC	288 fibers	2U
			MTP®	1,152 fibers	
	EDGE8-04U	72	LC	576 fibers	4U
			MTP®	2,304 fibers	

Published: 25/Oct/2023

Annex 2

Polarity drawings, often referred to as fiber optic polarity diagrams, are essential when designing and implementing data center links using fiber optic cabling. They play a crucial role in ensuring proper connectivity, signal integrity, and compatibility between different network components.

This section will cover the specific polarity drawings applicable to each one of the scenarios previously described.

Published: 25/Oct/2023

Scenario 1 - 800G and 400G - Switch to Server

MPO-8/12 APC to MPO-8/12 APC Local

Use Case A

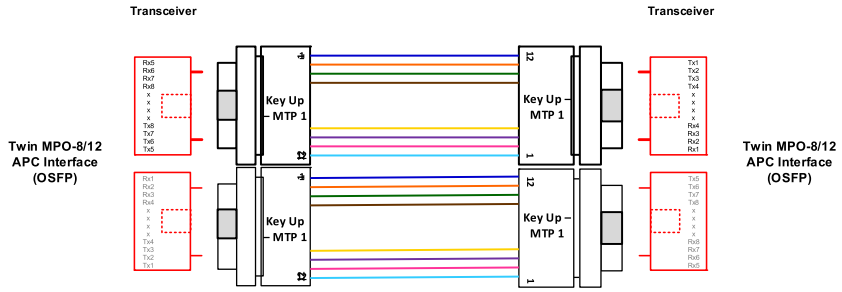

Use Case B

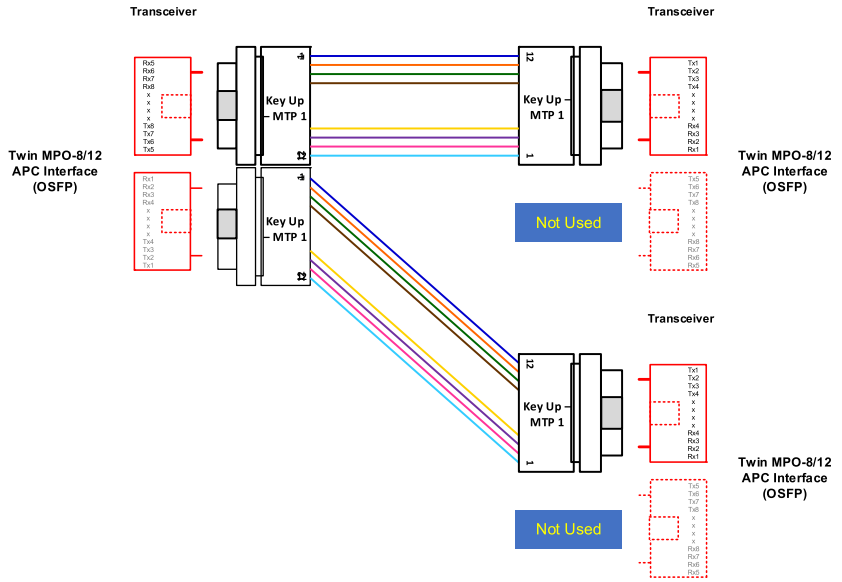

Use Case C

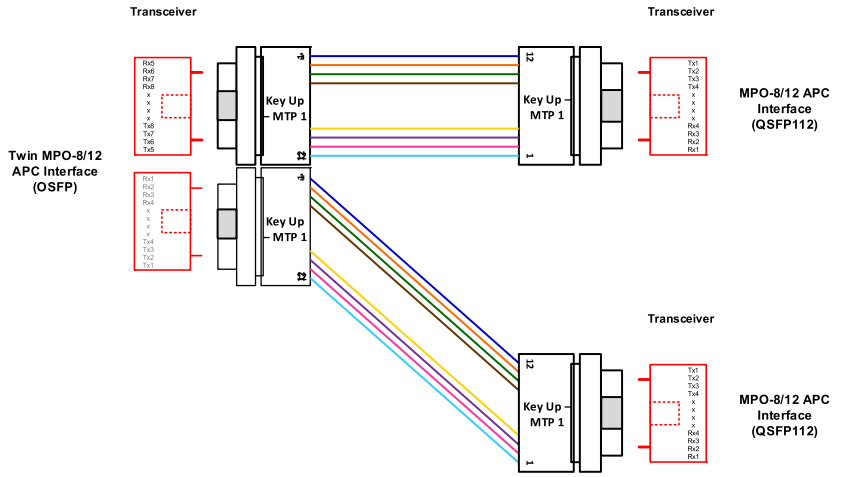

Published: 25/Oct/2023

Scenario 2 - 800G and 400G - Switch to Switch

MPO-8/12 APC to MPO-8/12 APC Across DC with Trunk

Use Case A

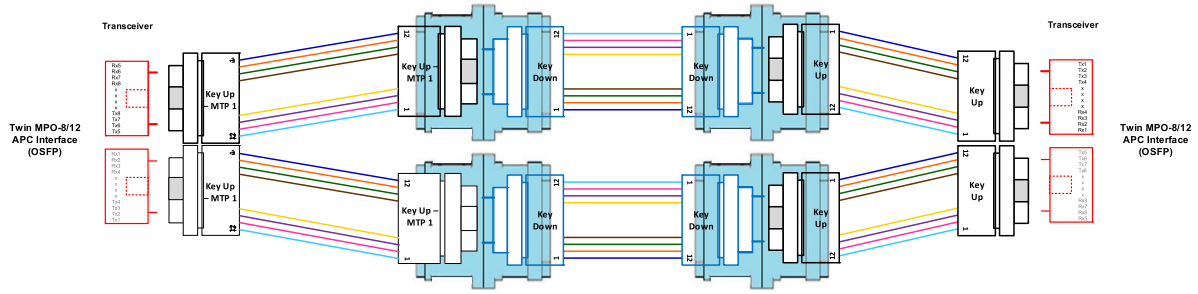

Use Case B

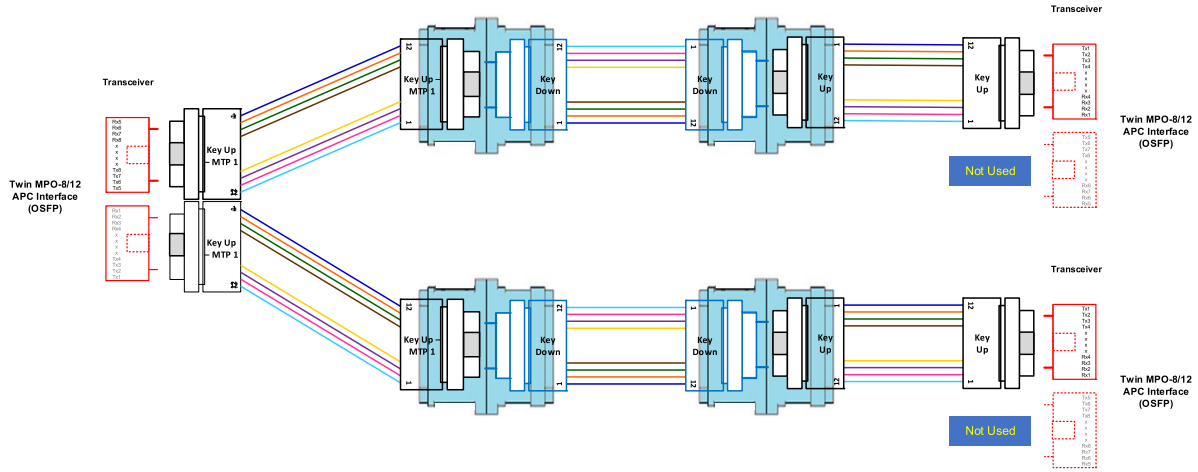

Use Case C

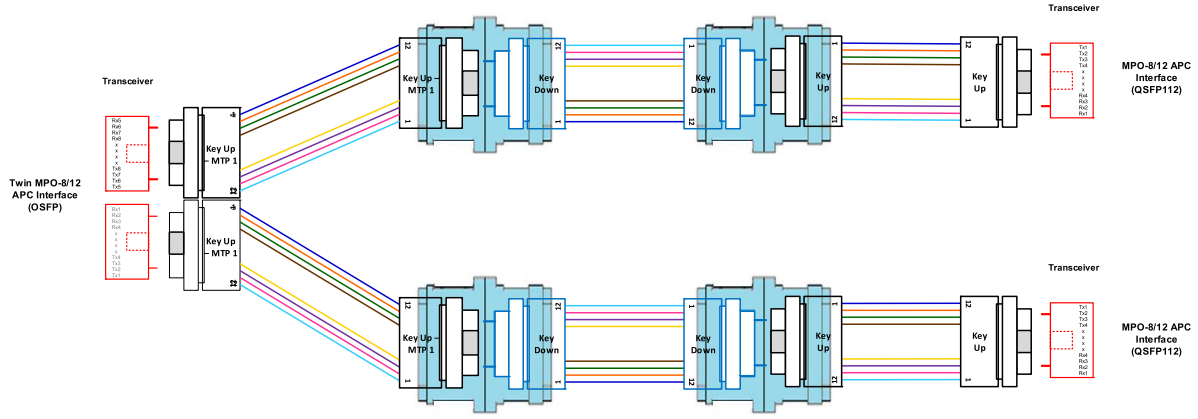

Published: 25/Oct/2023

Scenario 3 - 800G and 200G - Switch to Server

MPO-8/12 APC to MPO-8/12 APC Local

Use Case A

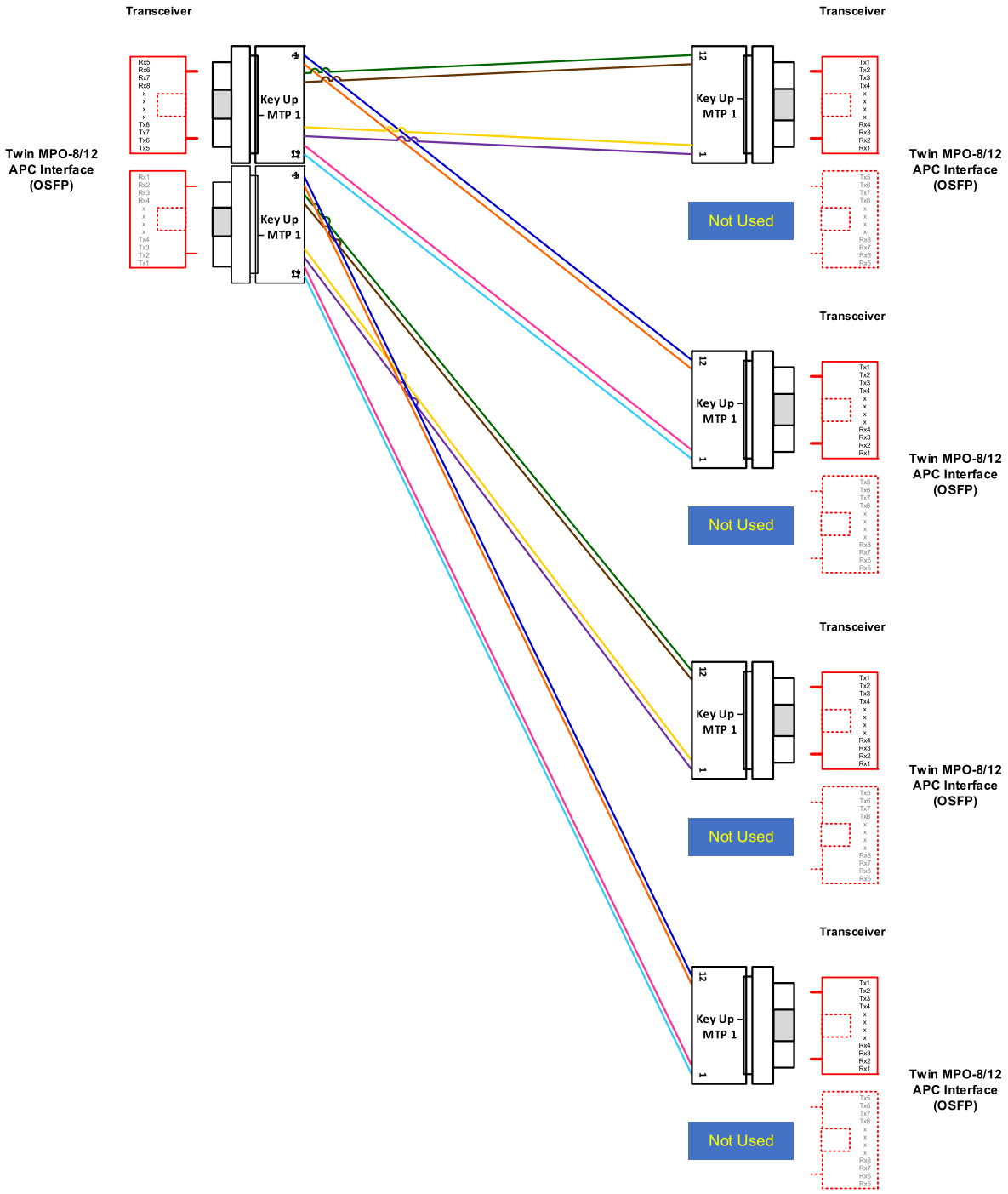

Published: 25/Oct/2023

Use Case B

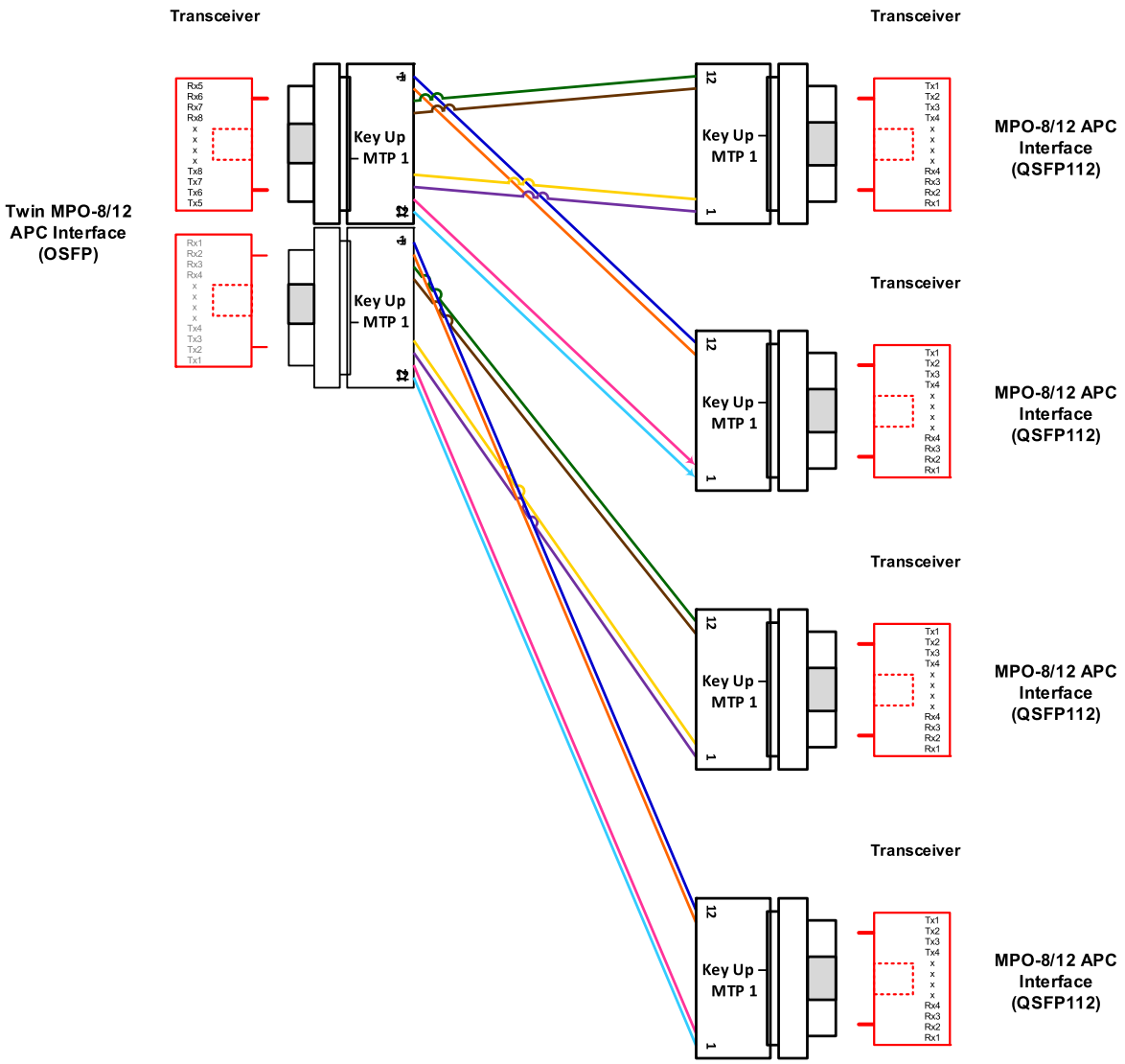

Published: 25/Oct/2023

Scenario 4 - 800G and 200G - Switch to Switch

MPO-8/12 APC to MPO-8/12 APC Across DC with Trunk

Use Case A

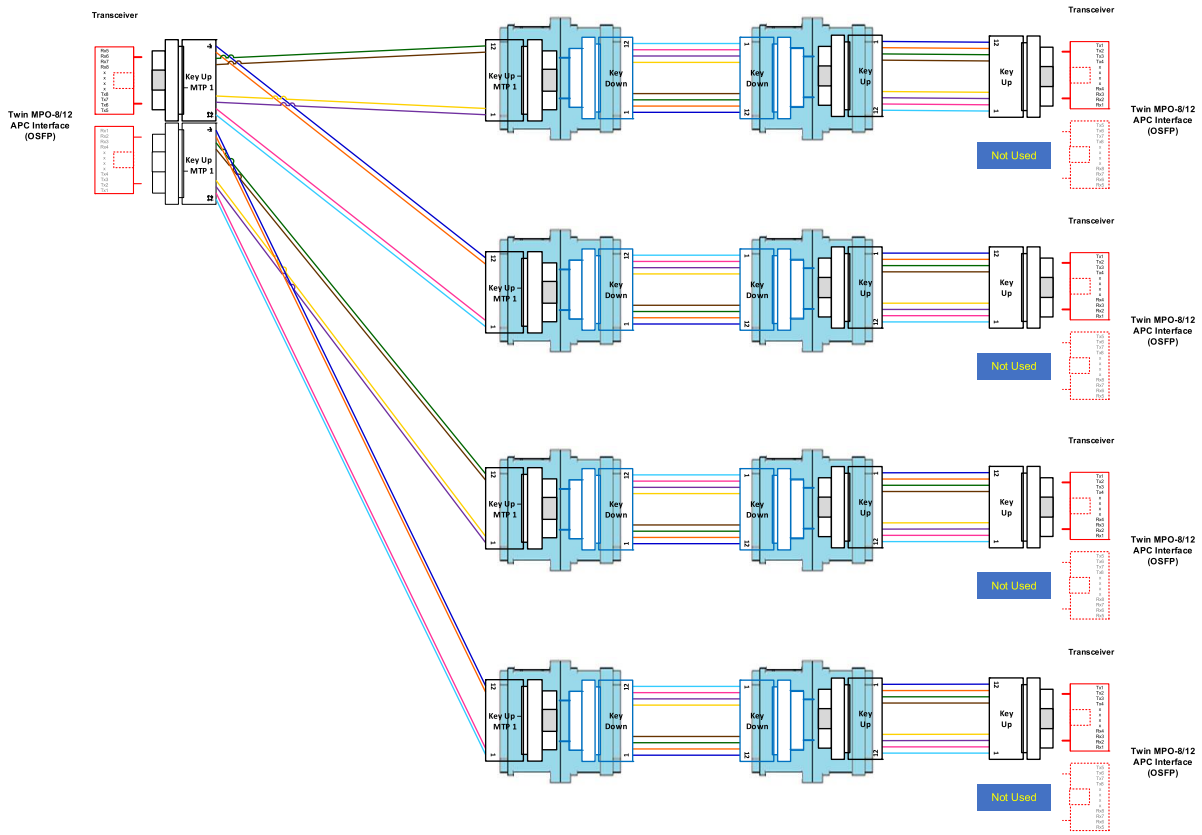

Use Case B

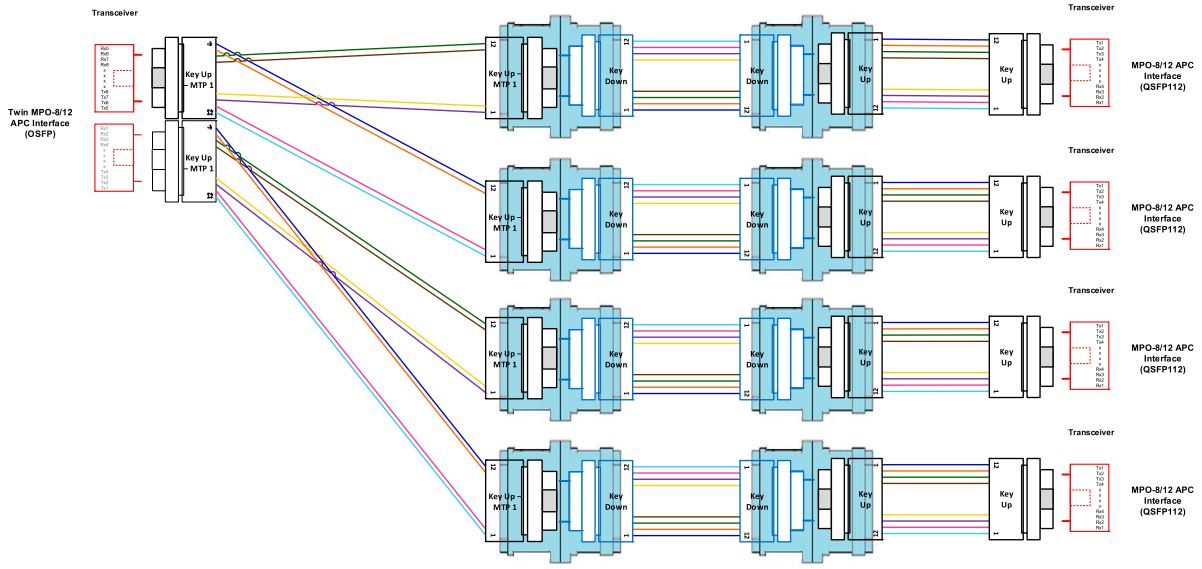

Published: 25/Oct/2023

Annex 3

This section contains a partial list of references to NVIDIA Overview Whitepapers. For more detailed information on NVIDIA's products, please visit https://docs.nvidia.com/

Transceivers:

- **MMS4X00-NM** 800Gbps Twin-port OSFP 2x400Gb/s **Single Mode DR8** 500m
  https://docs.nvidia.com/networking/display/mms4x00nm800g500m/application+overview

- **MMS4X00-NS** 800Gbps Twin-port OSFP 2x400Gb/s **Single Mode DR8** 100m
  https://docs.nvidia.com/networking/display/800gmms4x00ns/overview

- **MMA4Z00-NS** 800Gb/s Twin-port OSFP, 2x400Gb/s **Multimode SR8**, 50m
  https://docs.nvidia.com/networking/display/800gmma4z00ns/overview

Cables:

- **MFP7E30-Nxxx**, Single Mode, **Straight** Crossover Fibers Cable
- **MFP7E40-Nxxx**, Single Mode, **Splitter** Crossover Fibers Cable
  https://docs.nvidia.com/networking/display/800gmms4x00ns/recommended+nvidia+supplied+crossover+fiber+cables+part+numbers

- **MFP7E10-Nxxx**, Multimode, **Straight** Crossover Fibers Cable
- **MFP7E20-Nxxx**, Multimode, **Splitter** Crossover Fibers Cable
  https://docs.nvidia.com/networking/display/800gmma4z00ns/recommended+nvidia+supplied+crossover+fiber+cables+part+numbers

Published: 25/Oct/2023